Diesel Generating Set

MODEL	EC-375-2 60HZ
Standby Power（60HZ）	300KW /375KVA
Prime Power（60HZ）	280KW /350KVA

Standard Features

General Features:

- Engine（Cummins NTA855-G2）
- Radiator 50℃ max，fans are driven by belt, with safety guard
- 24V charge alternator
- Alternator (Kaijieli TWG Series-Stamford Type, Fraday, Meccalte or Equal), single bearing alternator IP22/IP23, insulation class H/H
- Absorber
- Dry type air filter, double fuel filter, oil filter, coolant filter
- Main line circuit breaker
- Standard control panel
- 12V batteries, rack and cable
- Ripple flex exhaust pipe, exhaust siphone, flange, muffler
- Tools kits
- User manual

Generator Ratings

Voltage	HZ	Phase	P.F（COS∅）	Standby Amps	Standby Ratings（KW/KVA）	Prime Ratings（KW/KVA）
480/277	60	3	0.8	420	280/350	250/313
460/266	60	3	0.8	439	280/350	250/313
440/254	60	3	0.8	459	280/350	250/313
416/240	60	3	0.8	485	280/350	250/313
Remarks: High Voltage of 6.3kv, 6.6kv, 10.5kv, 13.8kv etc are available.						

Prime Power (PRP): Prime power is available for an unlimited number of annual hours in variable load application, in accordance with GB/T2820-97 (eqvISO8528); A 10% overload capability is available for a period of 1 hour within a 12-hour period of operation.

Standby Power Rating (ESP): The standby power rating is applicable for supplying emergency power for the duration of a utility power interruption. No overload, utility parallel or negotiated outage operation capability is available at this rating.

Sales Promises

Ettes Power provides a full line of brand new and high quality products. Each and every unit is strictly factory tested. Warranty is according to our standard conditions: 12 months or 1,500 running hours, subject to the earlier one. And what's more, Cummins gensets enjoy world-wide united Warranty from Cummins engine agency or service centre at the client's local side.

Diesel Generating Set

ENGINE DATA

Manufacturer / Model:	Cummins NTA855-G2，4-cycle
Air Intake System:	Turbo, Water/Air cooling
Fuel System:	PT type fuel pump, EFC
Cylinder Arrangement:	6 in line
Displacement:	14 L
Bore and Stroke:	140×152（mm）
Compression Ratio:	14.5:1
Rated RPM:	1800rpm
Max. Standby Power at Rated RPM:	347KW/465HP
Governor Type:	Electronic
Frequency Regulation, Steady State:	⩽1.5%
Exhaust System	
Exhaust Gas Flow:	1253 L/S
Exhaust Temperature:	543℃
Max Back Pressure:	10 kPa
Air Intake System	
Max Intake Restriction:	6.25 kPa
Burning Capacity:	463L/S
Air Flow:	9808L/S
Fuel System	
100%(Prime Power) Load:	219 g/kw.h
75%(Prime Power) Load:	221 g/kw.h
50%(Prime Power) Load:	236 g/kw.h
Oil System	
Total Oil Capacity:	36.7 L
Oil Consumption:	⩽4 g/kw.h
Engine Oil Tank Capacity:	36 L
Oil Pressure at Rated RPM:	241-345 kPa
Cooling System	
Total Coolant Capacity:	85 L
Thermostat:	82-93 ℃
Max Water Temperature:	104℃

Diesel Generating Set

ALTERNATOR SPECIFICATION

GENERAL DATA

Compliance with GB755, BS5000, VDE0530, NEMAMG1-22, IED34-1, CSA22.2 and AS1359 standards.

Alternator Data	
Manufacturer / Type:	Kaijieli TWG Series-Stamford Type, Fraday, Meccalte or Equal
Number of Phase:	3
Connecting Type:	3 Phase and 4 Wires, “Y” type connecting
Number of Bearing:	1
Power Factor:	0.8
Protection Grade:	IP23
Altitude:	≤1000m
Exciter Type:	Brushless, self-exciting
Insulation Class, Temperature Rise:	H/H
Telephone Influence Factor (TIF):	＜50
THF:	＜2%
Voltage Regulation, Steady State:	≤±1%
Alternator Capacity:	313KVA
Alternator Efficiencies:	93%
Air Cooling Flow:	0.99m^3/s

GENERATING SET DATA

Voltage Regulation:	≥±5%
Voltage Regulation, Stead State:	≤±1%
Sudden Voltage Warp (100% Sudden Reduce):	≤+25%
Sudden Voltage Warp (Sudden Increase):	≤-20%
Voltage Stable Time (100% Sudden Reduce):	≤6S
Voltage Stable Time (Sudden Increase)	≤6S
Frequency Reduce:	⩽5% Adjustable
Frequency Regulation, Stead State:	≤1.5%
Frequency Waving:	≤0.8%
Sudden Frequency Warp (100% Sudden Reduce):	≤+12%
Sudden Frequency Warp (Sudden Increase):	≤-10%
Frequency Recovery Time (100% Sudden Reduce):	≤5S
Frequency Recovery Time (Sudden Increase):	≤5S

Diesel Generating Set

Options

Engine	Fuel System	Control System
● Heater	● Daily Fuel Tank ● Water Separator	● Remote Control Panel ● Auto Transfer Switch (ATS) Control Panel ● Paralleling System ● Electricity Output Cabinet

Alternator	Others	Data
● Anti Condensation Heater ● Permanent Magnet Generator（PMG） ● Drop CT（For Paralleling）	● Rainproof Type ● Soundproof Type ● Trailer Type	● Engine Parts Drawing List ● Spare Parts

Dimension & Weight

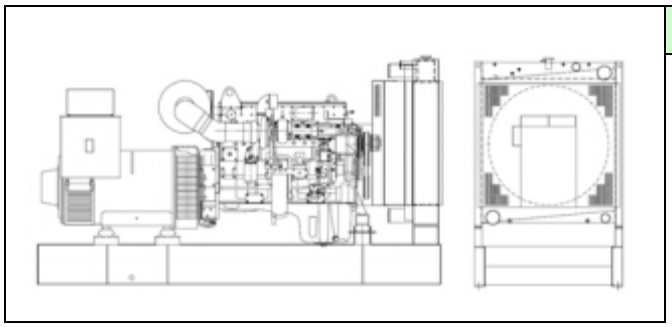

Standard (Open Type) Without Base Fuel Tank
Overall Size: 3020（mm）×1100（mm）×1850（mm）
Weight: 2800kg

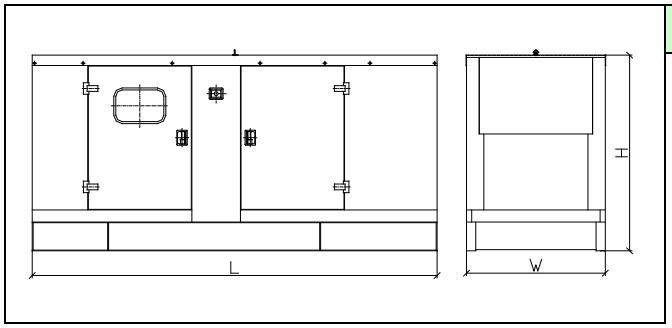

Soundproof Type
Overall Size: 4225（mm）×1460（mm）×2150（mm）
Weight: 4000kg

Diesel Generating Set

Standard Control Panel/LCD

Ettes Power Standard Control Panel, usually adopts control module of UK Deepsea DSE6020 or Smargen 6110/6120 series, using micro processing techniques integrating digital, intelligent and network techniques which can carry out functions including auto start/stop, data measure, alarming. The controller uses LCD display, optional Chinese and English display interface with operation easy and reliable. It can be widely used in all types of generator automatic control system for compact structures, advanced circuits, simple connections and high reliability □

Auto Module Control Panel/Automatic Transfer Switch

Auto Module Control Panel, usually adopt control module of UK Deepsea DSE 7320 or Equal, is the configuration for nobody on duty generators control, This kind of panel adopts auto module control system, with large LCD display to show the menu.

Features: receive remote output signal from ATS and realize auto start and stop of generators.

RS232 or 485 interface which can communicate with PC to realize remote operation.

Auto Mains Failure controller, can realize furthermore can detect ATS and control directly.

Auto Synchronization Parallel Control Panel

Automatic Parallel Control Panel, usually adopting intelligent control module of UK Deepsea DSE 7510 or SDE8610 or Equal, This new automatic parallel system is inserted and folded installed, no need the peripheral relay and logic circuit. The main switch adopts electronic breaker or frame breaker, combined together with the generator, which is very reliable. One generator, one panel. The panel can be used both for single genset working or Gensets Parallel working. This kind of panel also can be used to parallel generator when the capability of the power plant needs to be enlarged in the future. □